Instruction Sheet
10511258
12SE08 C/P16954 REV 1

19SI, 21SI, 22SI AND 23SI HEAVY DUTY ALTERNATOR INSTALLATION INSTRUCTIONS

WARNING!!! ALWAYS USE PROPER EYE PROTECTION WHEN PERFORMING ANY MECHANICAL REPAIRS TO A VEHICLE – INCLUDING, BUT NOT LIMITED TO, ANY INSTALLATION AND OR REPAIRS TO THE DELCO REMY ALTERNATORS. FAILURE TO USE PROPER EYE PROTECTION CAN LEAD TO SERIOUS AND PERMANENT EYE DAMAGE.

Only perform the mechanical functions that you are properly qualified to perform. Mechanical repairs that are beyond your technical capabilities should be handled by a professional installation specialist.

DANGER!!! To avoid injury or damage, always disconnect the negative cable at battery before removing or replacing the alternator. The alternator output terminal is always live ("hot"). If the battery is not disconnected, a tool accidentally touching this terminal and ground can quickly get hot enough to cause skin burn or damage to the tool and surrounding parts.

FOLLOW ENGINE OR VEHICLE MANUFACTURER'S INSTRUCTIONS FOR REMOVING THE OLD ALTERNATOR FROM THE ENGINE AND INSTALLING THE NEW ALTERNATOR.

1. **PULLEY INSTRUCTIONS:** Use pulley from the old alternator if this alternator does not have a pulley or pulley supplied is different from the one on alternator being replaced. Hold the shaft by placing a hex-wrench in the hexagonal hole in the end of the shaft while removing or installing the pulley. Tighten the pulley nut to 100 Nm (75 lb ft). If there are any spacers when removing the pulley, make sure all spacers are replaced when installing the pulley on this alternator.
2. The alternator supplied in this package may have more terminals than the one being replaced. The new alternator will operate properly by connecting only those terminals used on the old alternator. (**Note:** The "R" terminal is normally connected to the tachometer or certain types of control relays; maximum current draw is 4 amperes. The "I" terminal is normally connected to an indicator lamp; maximum current draw is 1 ampere).
3. Tighten output (battery) terminal nut according to thread size below. DO NOT OVERTIGHTEN OUTPUT TERMINAL NUT!

Terminal Size	Torque
5/16" and M6	11Nm (100 lb in)
1/4"	7 Nm (65 lb in)

4. If threaded "R" or "I" terminals have a hex base (next to the alternator housing), hold the hex portion with a wrench while tightening nuts on these terminals. Tighten "R" terminal and/or "I' terminal nuts as follows:

Terminal Size	Torque
10-24 and M4	2 Nm (20 lb in)

5. Install terminal caps provided to protect connections. If the "R" or "I" terminal is a pin type (push), ensure connector boot is fully seated around the insulator.
6. If application uses a ground lead, install lead to threaded ground (GRD) hole in alternator housing. Remy Inc. strongly recommends use of a ground lead. Tighten connecting screws as follows:

Terminal Size	Torque
5/16" and M10	11 Nm (100 lb in)
1/4"	6 Nm (55 lb in)

BELT TENSIONING INSTRUCTIONS FOR HINGE MOUNT: Improper belt tension can damage the alternator or cause the bearings to fail later. If the belt must be tightened manually, pry only against the drive end (DE) frame [1]. If that is not possible, use a wood block with one end positioned against the DE frame between the pry bar and alternator. Use a torque wrench to tighten the mounting bolts to specified torque. Follow engine or vehicle manufacturer's specifications carefully for belt tension and mounting bolts torque. **DO NOT OVER TIGHTEN BELT!**

BELT TENSION INSTRUCTIONS FOR PAD MOUNT:
Improper belt tension can damage the alternator or cause the bearings to fail later. Use a torque wrench to tighten the mounting bolts to specified torque. Follow engine or vehicle manufacturer's specifications carefully for belt tension and mounting bolts torque. **ENSURE BELT TENSIONING SYSTEM DOES NOT OVERTIGHTEN BELT!**

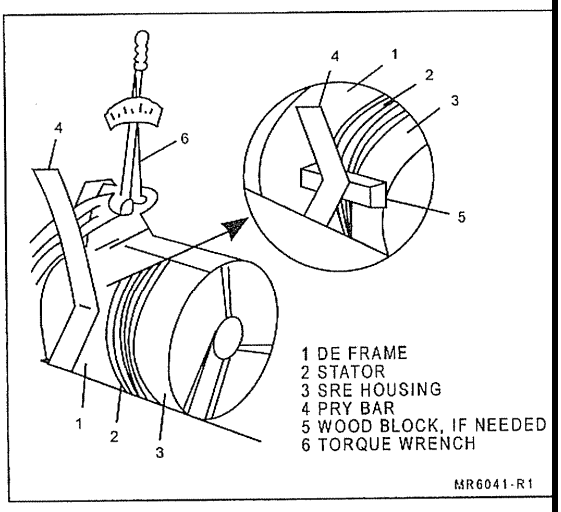

Adjusting Belt Tension

NOTICE - Only licensed Remy Inc. product and component parts should be used, and the use of other parts or modifications not approved by Remy Inc. will void all applicable warranties. The failure to carefully follow these Installation Instructions, set forth above, will void all applicable warranties.

Delco Remy® is a registered trademark of General Motors Corporation, licensed to Remy Inc., Pendleton, IN 46064.
© 2008 Remy Inc.