37MT, 41MT and 42MT STARTERS 12V and 24V SEMI-SOLID LINK SOLENOID INSTALLATION INSTRUCTIONS

NOTICE! Starting Motor must be removed from vehicle before the Semi-Solid Link Solenoid can be removed and replaced. Review all of the removal instructions before proceeding.

WARNING!!! ALWAYS USE PROPER EYE PROTECTION WHEN PERFORMING ANY MECHANICAL REPAIRS TO A VEHICLE – INCLUDING, BUT NOT LIMITED TO, ANY INSTALLATION AND OR REPAIRS TO THE DELCO REMY STARTING MOTORS. FAILURE TO USE PROPER EYE PROTECTION CAN LEAD TO SERIOUS AND PERMANENT EYE DAMAGE.

Only perform the mechanical functions that you are properly qualified to perform. Mechanical repairs that are beyond your technical capabilities should be handled by a professional installation specialist.

NOTICE! FOLLOW ENGINE AND/OR VEHICLE MANUFACTURERS INSTRUCTIONS CAREFULLY WHEN REMOVING AND INSTALLING THE STARTERS.

These instructions describe the removal process for 37MT, 41MT and 42MT Conventional and Semi-Solid Link Solenoids and the installation procedures for Semi-Solid Link Solenoids.

IMPORTANT: THIS PACKAGE INCLUDES **TWO NEW MOTOR TERMINAL CONNECTOR STRAPS** TO REPLACE THE ONES ON THE STARTER. ONE STRAP IS COMMON TO THE 37MT & 41MT AND THE OTHER IS FOR 42MT ONLY. IT IS IMPORTANT TO USE THE CORRECT STRAP AS LABELED [See illustrations, page 4]. THE STRAPS ON NEWER STARTERS MAY BE THE SAME AS THESE IN PACKAGE.

Determine the series of starting motor and solenoid type you are replacing. The motor series number is stamped in the Series Block on the starter name tag and the solenoid part number is stamped on the metal case of the solenoid.

- Conventional solenoid part numbers will be 1115657 or lower (Follow instructions A)
- Semi-solid link solenoid part numbers will be 1115663 or higher (Follow instructions B)

Fasteners, in this document, are referred to by wrench size rather than thread size.

DANGER!!! ALWAYS DISCONNECT BATTERY GROUND BEFORE REMOVING OR REPLACING CABLES AT THE STARTER. FAILURE TO DISCONNECT THE BATTERY GROUND CABLE CAN LEAD TO SERIOUS INJURY.

A. CONVENTIONAL SOLENOID REMOVAL INSTRUCTIONS (See illustrations pages 3 & 4)

1. For older 42MT models, loosen 3/4” nut on solenoid motor terminal [1]. For 37MT, 41MT and newer 42MT starters, loosen E8 Torx Head motor terminal screw [1*].
2. Remove E8 Torx Head screw [2] at field connection on starter frame.
3. For older 42MT models, remove 3/4” nut from solenoid motor terminal [1]. For 37MT, 41MT and newer 42MT starters, remove E8 Torx Head solenoid motor terminal screw [1*].
4. Remove solenoid to motor field connector strap [3]. Dispose of old design connector strap.
5. For insulated models (flexible ground cable not shown), remove top 3/8” nut and washer assembly from ground terminal [5] of solenoid.
6. Remove flexible ground lead (not shown) from the solenoid ground terminal [5].
7. Remove three E8 Torx Head solenoid mounting screws [6].
8. Remove solenoid [7] from lever housing. Plunger and boot assembly [9] will remain on starter.
9. Remove access plug and gasket [4] from front of lever housing, ensuring gasket is removed.

10. Remove 1/2” plunger nut [8], carefully so it does not drop into starter, while holding the plunger securely to prevent rotation. Dispose of nut [8].
11. Remove plunger and boot assembly [9].

B. SEMI-SOLID-LINK SOLENOID REMOVAL INSTRUCTIONS (See illustrations pages 3 & 4)

1. For older 42MT models, loosen 3/4” nut on solenoid motor terminal [1]. For 37MT, 41MT and newer 42MT starters, loosen E8 Torx Head solenoid motor terminal screw [1*].
2. Remove E8 Torx Head screw [2] at field connection on starter frame.
3. For older 42MT models, remove 3/4” nut from solenoid motor terminal [1]. For 37MT, 41MTand newer 42MT starters, remove E8 Torx Head solenoid motor terminal screw [1*].
4. Remove solenoid to starter field connector strap [3]. Dispose of old design connector strap.
5. For insulated models (flexible ground cable not shown), remove top 3/8” nut and washer assembly from ground terminal [5] of solenoid.
6. Remove flexible ground cable (not shown) from the solenoid ground terminal [5].
7. Remove access plug and gasket [4] from front of lever housing, ensuring gasket is removed.
8. Remove 1/2" plunger nut [8] by carefully following the steps outlined below. **Proper care must be exercised when completing this step to avoid personal injury and property damage. Also, to avoid overheating and possible damage to the solenoid, power should not be applied in excess of one minute.**
   a) Solenoid must be energized for removal of 1/2" plunger nut [8] to prevent plunger from rotating and damaging the rubber boot. **DANGER!!!** **Ensure stamped metal connector strap [3] is disconnected to prevent motor from rotating.**
      i. Check required voltage (12V or 24V) stamped on solenoid metal case to energize solenoid.
      ii. Apply appropriate power (12V or 24V) to solenoid between switch "S" [12] (positive lead) and ground [5] (negative lead) terminals. Seat the plunger by simultaneously pushing on 1/2" plunger nut [8]. **Note:** 24 volts can be obtained by connecting two 12V batteries in series.
   b) Remove 1/2” plunger nut [8] carefully, so it does not drop into motor, and dispose.
   c) **Remove power immediately after nut is removed.**
9. Remove three E8 Torx Head solenoid mounting screws [6].
10. Remove complete solenoid [7] and plunger assembly from lever housing.

C. SEMI-SOLID LINK SOLENOID INSTALLATON INSTRUCTIONS (See illustrations pages 3 & 4)

Using replacement semi-solid link solenoid:

1. Slide solenoid over lever housing register [10].
2. Orient solenoid so that the flat flange on solenoid metal case aligns with flat flange on the housing.
3. Verify that the plunger rod [11] is inside the shift lever guide.
4. Install three E8 Torx Head solenoid mounting screws [6] and torque to **14.1-21.5 Nm (125-190 lb in).**
5. Install a new 1/2” plunger nut [8] by hand finger tight. **Use of force can rotate the plunger and damage the rubber boot.**
6. Check and adjust pinion clearance**. Proper care must be exercised when completing this step to avoid personal injury and property damage. Also, to avoid overheating and possible damage to the solenoid, power should not be applied in excess of one minute.**
   a) Solenoid must be energized to prevent plunger from rotating and damaging the rubber boot while tightening plunger nut [8] to adjust pinion clearance. **DANGER!!!** **Ensure stamped metal connector strap [3] is disconnected to prevent motor from rotating.**
      i. Check required voltage (12V or 24V) stamped on the solenoid metal case.
      ii. Apply appropriate power (12V or 24V) to solenoid between switch "S" [12] (positive lead) and ground [5] (negative lead) terminals. Seat the plunger by simultaneously pushing on 1/2" plunger nut [8]. **Note:** 24 volts can be obtained by connecting two 12V batteries in series.

b) Adjust 1/2" plunger nut [8] to obtain correct distance between the pinion face [13] and the inside of the machined surface of the nose housing [14]. **This distance must conform to the product specifications in order for the starter to function properly.** While measuring, apply slight pressure against the pinion [13] to take the slack out.
   i. On 37MT models, the required distance is between 0.01" and 0.07".
   ii. On 41MT models, the required distance is between 0.15" and 0.21".
   iii. On 42MT models, the required distance is between 0.328" and 0.390".

c) **Disconnect power immediately after pinion is properly adjusted.**

7. Install access plug and gasket [4] to front of lever housing and tighten to a minimum of **8.1 Nm (72 lb in).**
8. Install solenoid-to-motor field connector strap [3], using correct strap (See strap illustrations, page 4).
   a) Install E8 Torx Head field terminal screw [2] on starter frame finger tight.
   b) Install E8 Torx Head screw on solenoid motor terminal [1*] finger tight.
   c) Tighten E8 Torx Head screw [1*] at solenoid motor terminal to **8.5-10.7 Nm (75-95 lb in).**
   d) Tighten E8 Torx Head screw [2] at starter frame to **8.5-10.7 Nm (75-95 lb in).**
9. For insulated models, remove top 3/8" nut and washer assembly from solenoid ground terminal [5] and install flexible ground cable (not shown on illustrations).
10. Install 3/8" ground terminal nut and washer assembly [5] and tighten to **1.8-4.3 Nm (16-38 lb in).**
11. Check motor for proper function before installation.

SOLENOID ILLUSTRATIONS

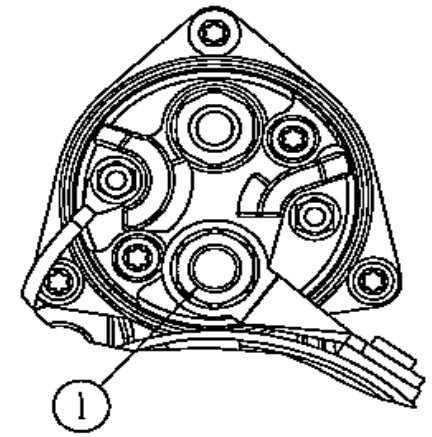

OLDER 42 MT 3/4" SOLENOID MOTOR TERMINAL NUT

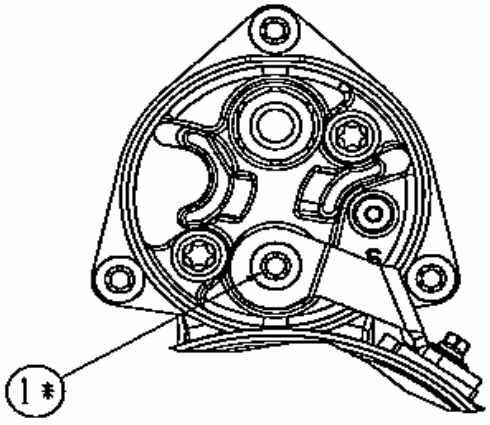

37MT, 41MT, **NEWER 42MT** E8 TORX HEAD SOLENOID MOTOR TERMINAL SCREW

Warning-Be aware that only licensed Remy Inc. product and component parts should be used and the use of other parts or modifications not approved by Remy Inc. will void any warranty concerning, but not limited to, product performance or reliability. The failure to carefully follow Installation Package guidelines set forth above will likewise void any and all warranty, **including the implied warranty of merchantability and fitness for a particular purpose.** Delco Remy® is a registered trademark of General Motors Corporation, licensed to Remy Inc., Anderson, IN 46013.

37MT, 41MT, & 42MT STARTING MOTOR ILLUSTRATIONS

37MT & 41MT
CONNECTOR STRAP

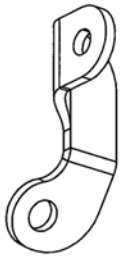
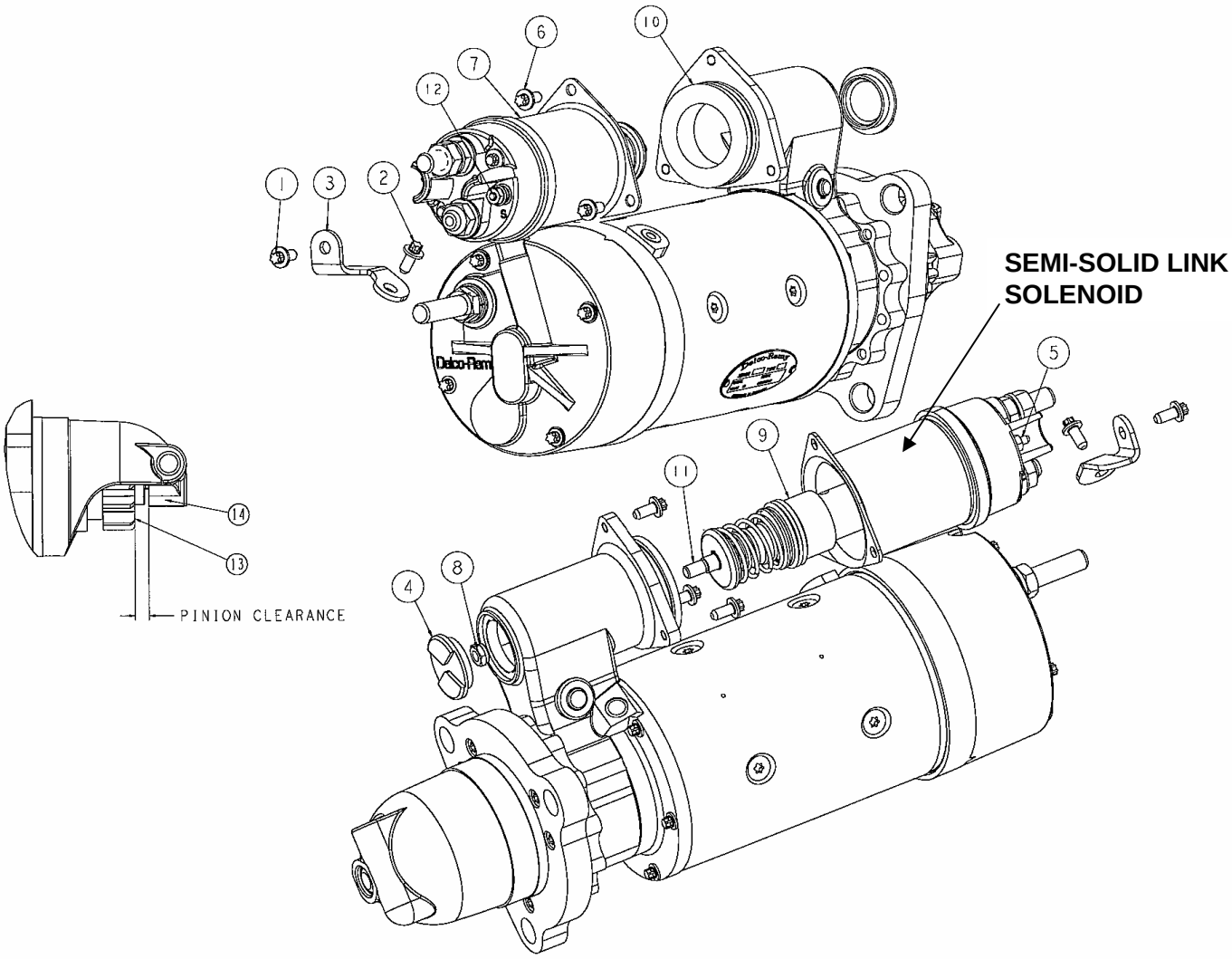
42MT
CONNECTOR STRAP